Microgrid Technology Development at INER

Dr. Kuo-Yuan Lo
Institute of Nuclear Energy Research (INER)
21 Oct. 2016

行政院原子能委員會
核能研究所
INER
Institute of Nuclear Energy Research
Atomic Energy Council, Executive Yuan

Outline

- Introduction of INER
- Background of Microgrid Project
- Current Research Status of Microgrid Technology
- Application Sites

核能研究所

Location of INER

http://www.iner.gov.tw

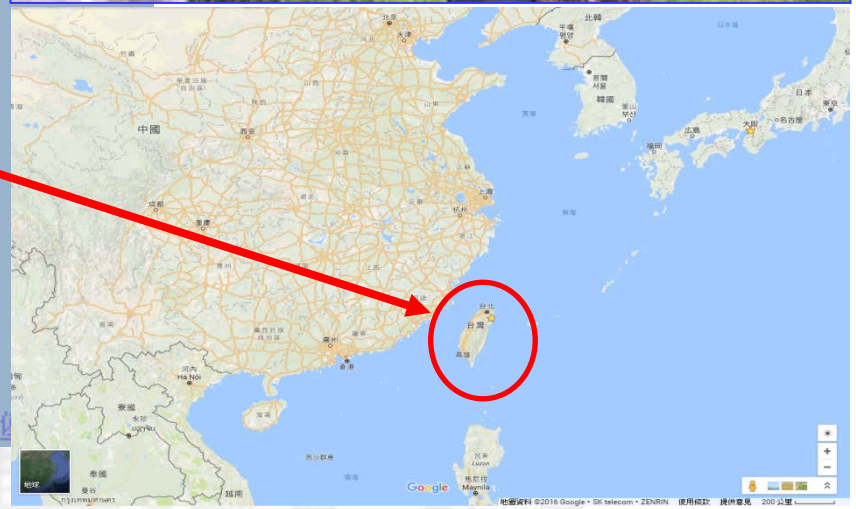

Organization Chart of INER

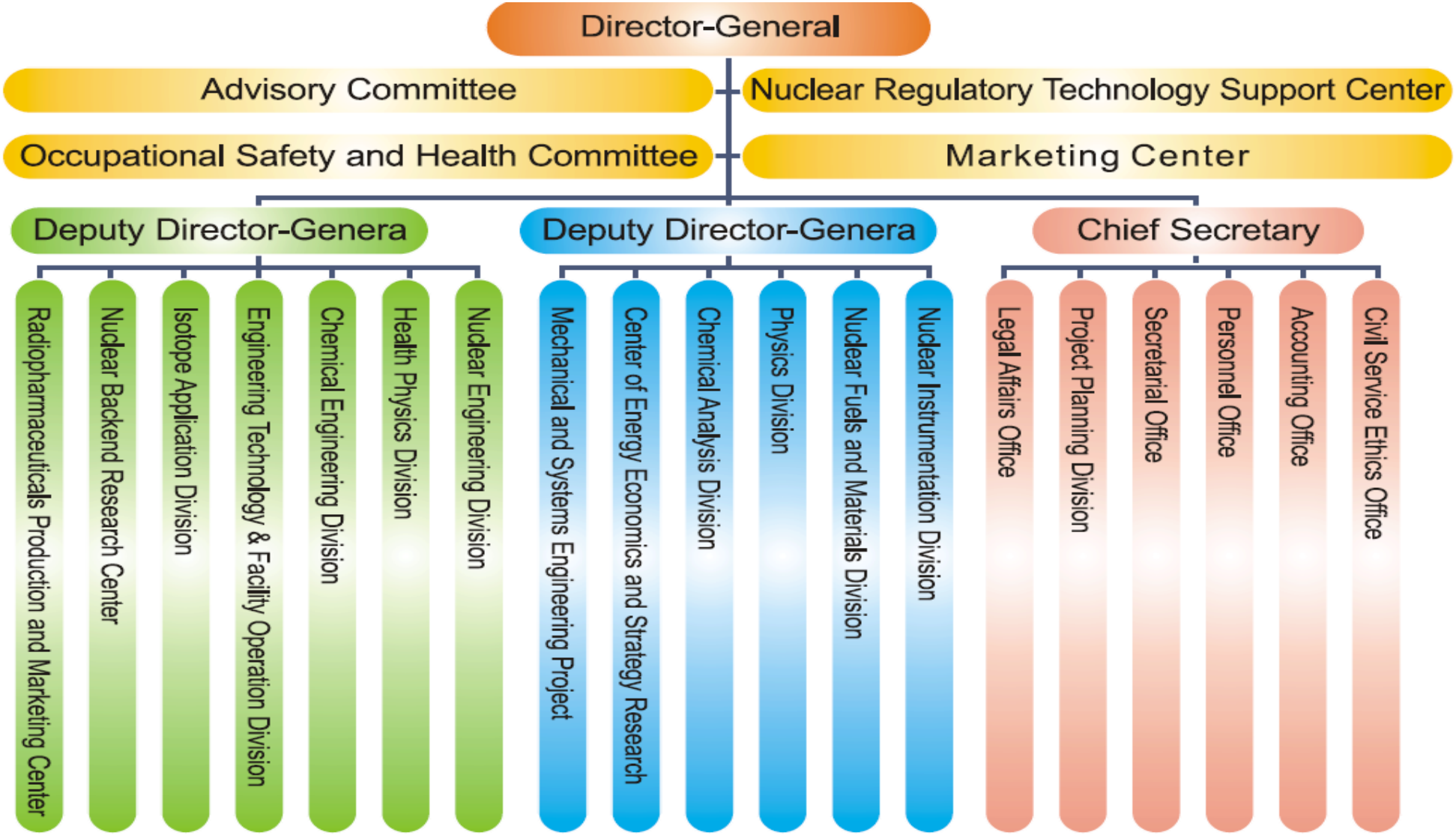

Manpower: 1234 Persons

核能研究所

Profile of INER

Statistics of Educational Background for Research Staffs

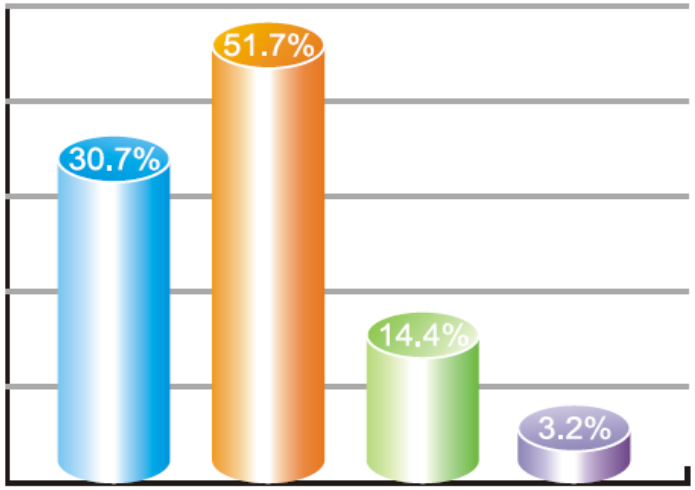

Ph.D.	115 Persons (30.7%)
Master	194 Persons (51.7%)
Vocational School	54 Persons (14.4%)
Bachelor	12 Persons (3.2%)
Research Staffs	375 Persons

2014 Annual Budget — Unit: Thousand USD

Administration and Safety	36,643	56.25%
Management and Operation	4,512	6.93%
R&D Projects	19,830	30.44%
Technology Promotion and Service	4,157	6.38%
Total	65,142	100%

核能研究所

Outline

- Introduction of INER
- Background of Microgrid Project
- Current Research Status of Microgrid Technology
- Application Sites

核能研究所

INER Microgrid

- The first microgrid test field in Taiwan
- Accepts the commands from Taipower Feeder Dispatch Center to perform demand response control by OpenADR or islanding operation.

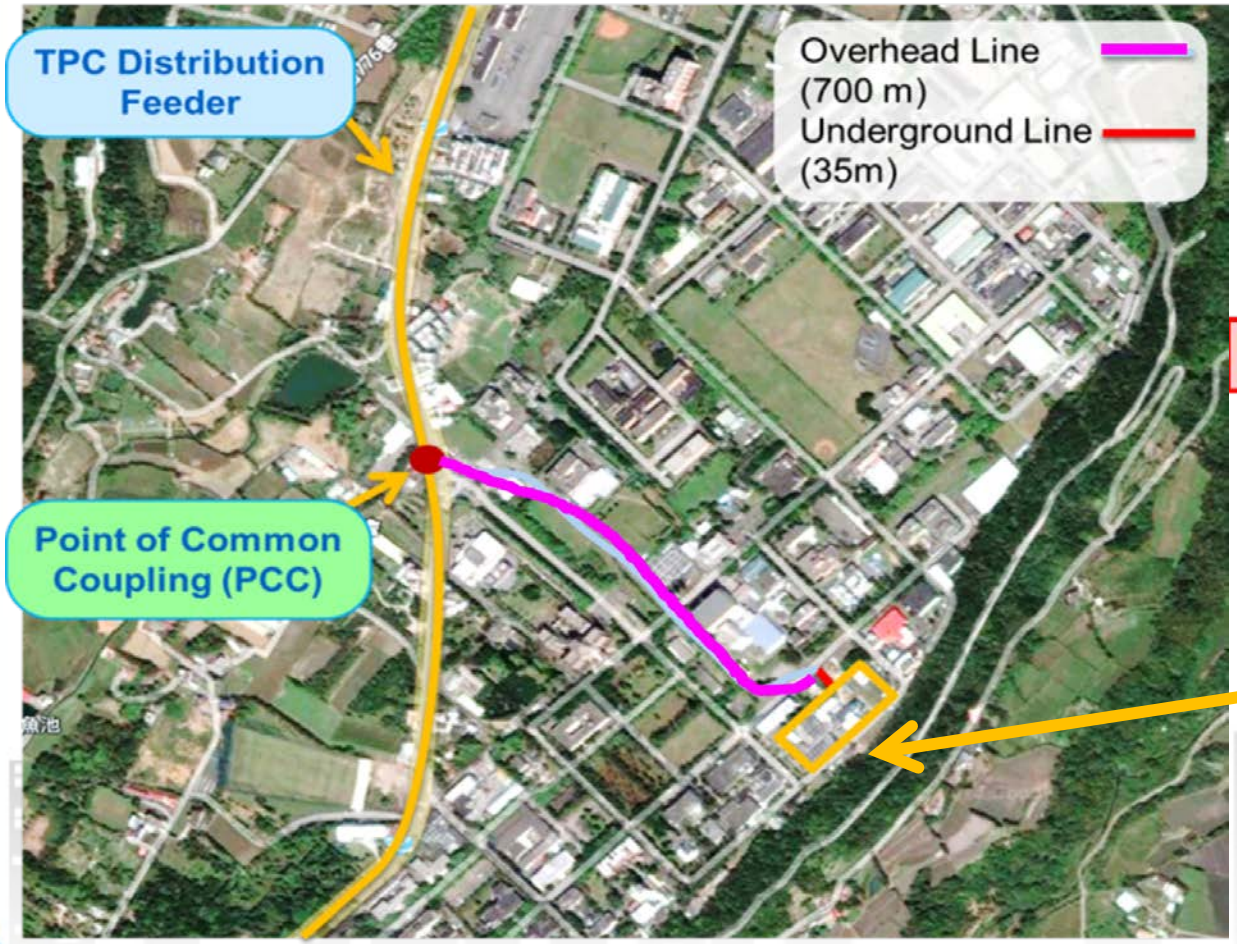

核能研究所

System Configuration

- **Renewable Energy**
  - Wind Turbine (150 kW & 25 kW & 3 kW)
  - PV (40 kW PV & 91.5 kW HCPV)
- **Generation and Energy Storage**
  - Microturbine (65 kW x 3)
  - Battery Storage system (240 kWh)
- **Other Components**
  - Static Switch
  - Power Filter
  - Load

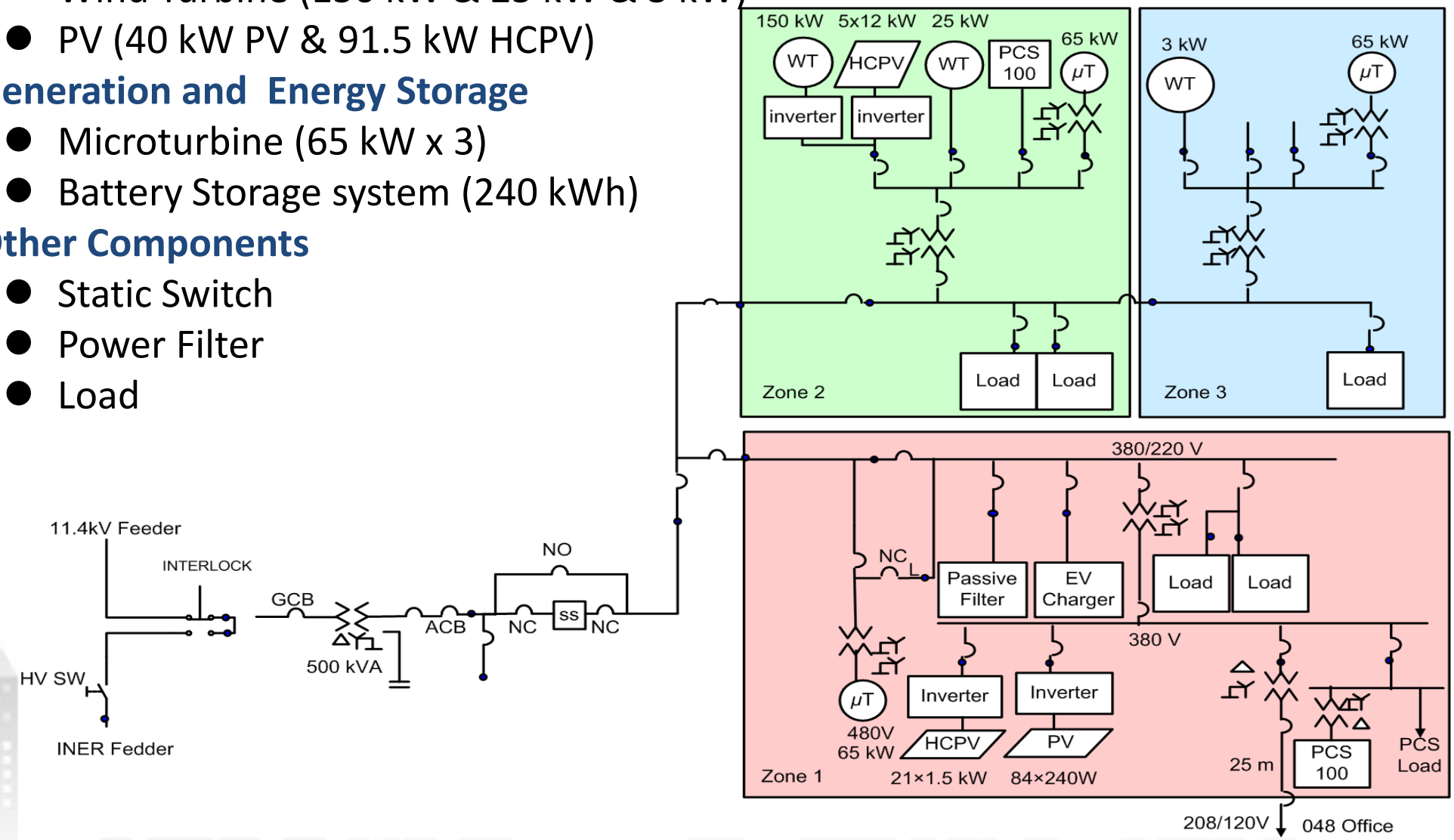

Outline

- Introduction of INER
- Background of Microgrid Project
- Current Research Status of Microgrid Technology
- Application Sites

核能研究所

Microgrid Technology Development

(1) Power System Technology

- Microgrid Stability Analysis
- Protection and Coordination
- Power Quality Analysis

(2) Power Electronics Technology

- Static Switch
- Smooth Switching Inverter
- Multi-Level Bi-directional Inverter for Battery Energy Storage System

(3) Intelligent control and EMS

- Energy Management System
- Generation Prediction
- EV Charge Scheduling Management
- Demand Response with OpenADR
- Islanding Operation Test

核能研究所

(1) Power System Technology

- Microgrid Stability Analysis

- **Software Tools**
  1. PSCAD
  2. CYME/PSAF
  3. NEPLAN
  4. Matlab
- **System Analysis**
  1. System Planning
  2. Modelling
  3. Power Flow
  4. Fault Current
  5. Impact Analysis
  6. Scenarios Design

  ⋮

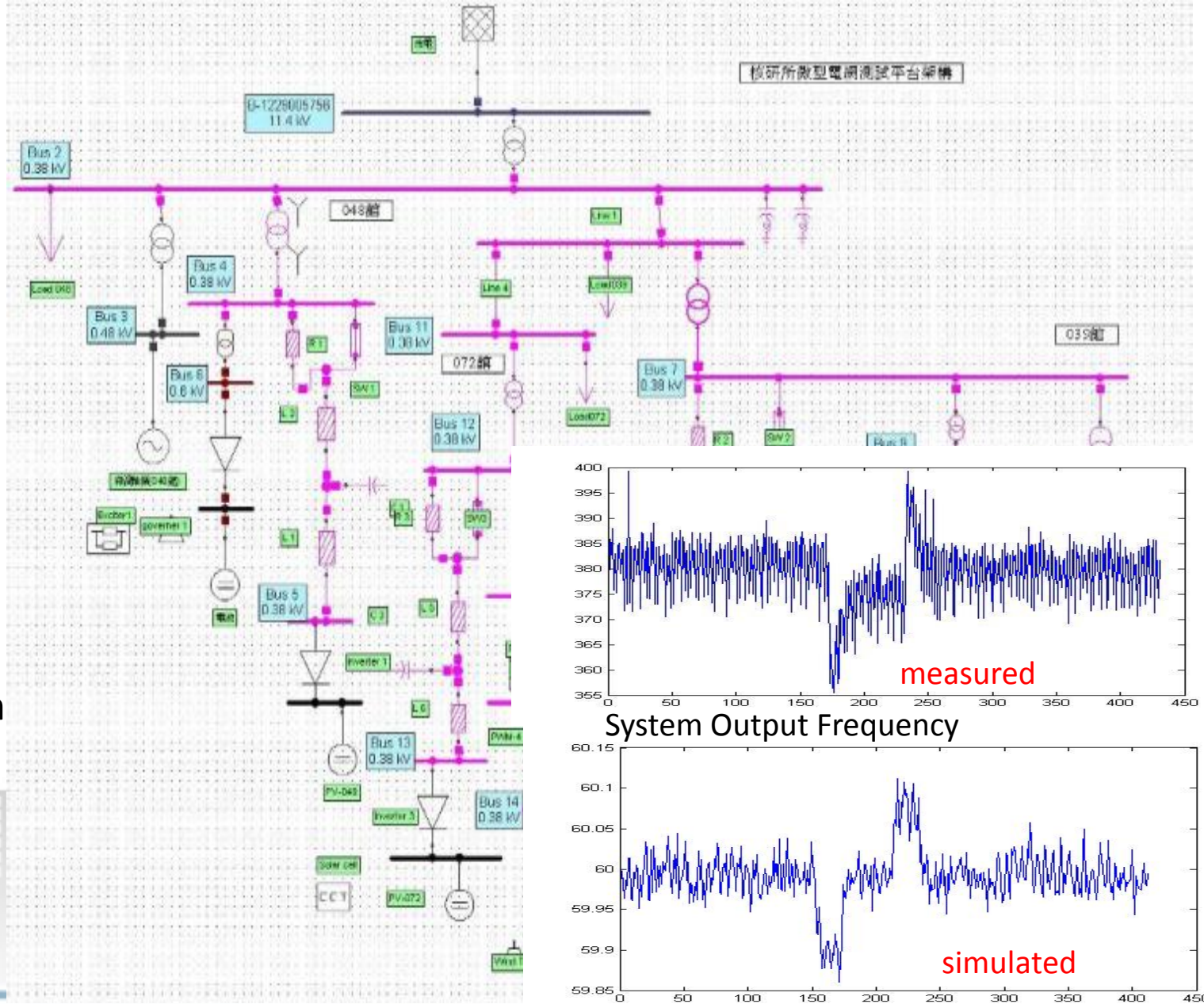

核能研究所

(1) Power System Technology

- Protection and Coordination

➢ **Protection coordination analysis**

- Fault current calculation & parameter selection and design for protection decision-making algorithm
- Action analysis for (NFB & OC Relay)

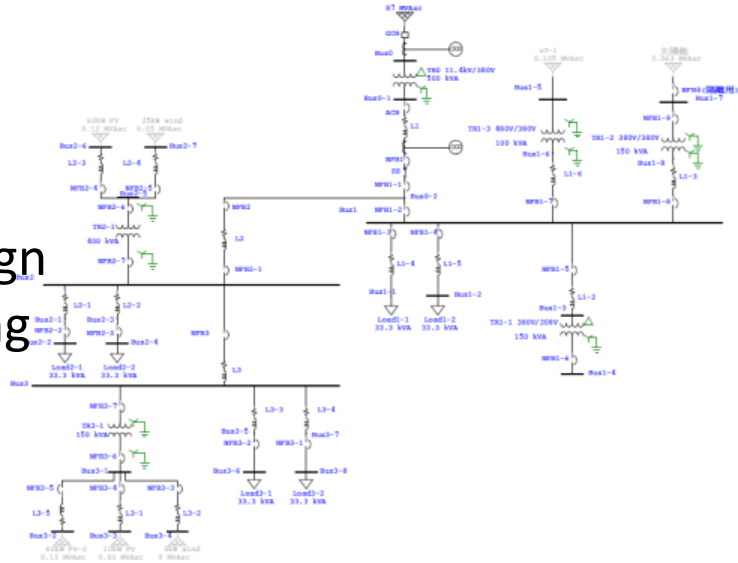

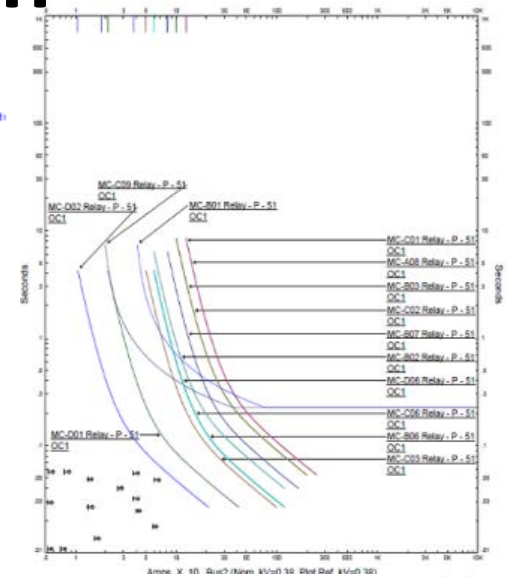

➢ **Artificial fault testing**

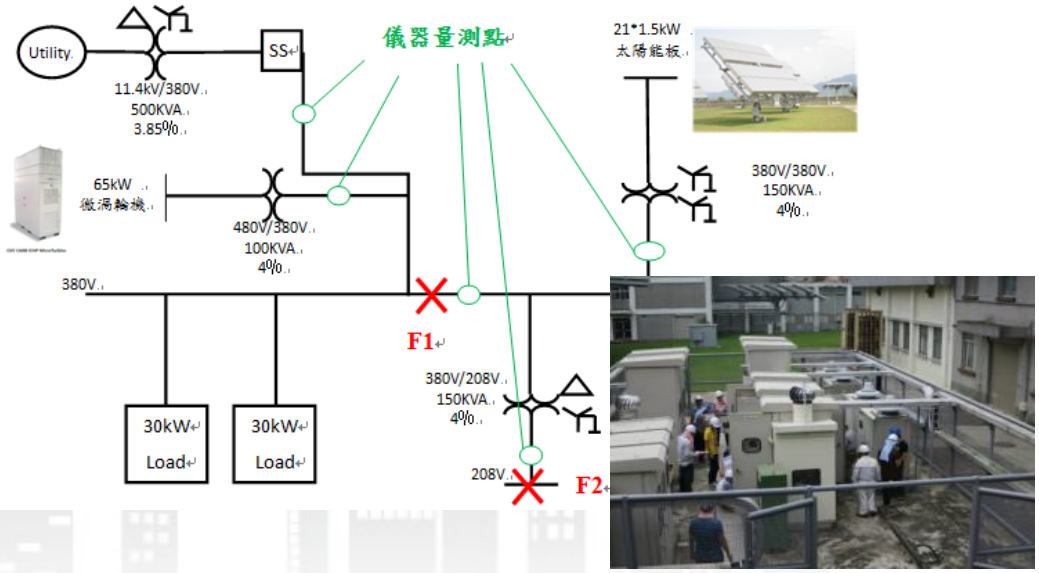

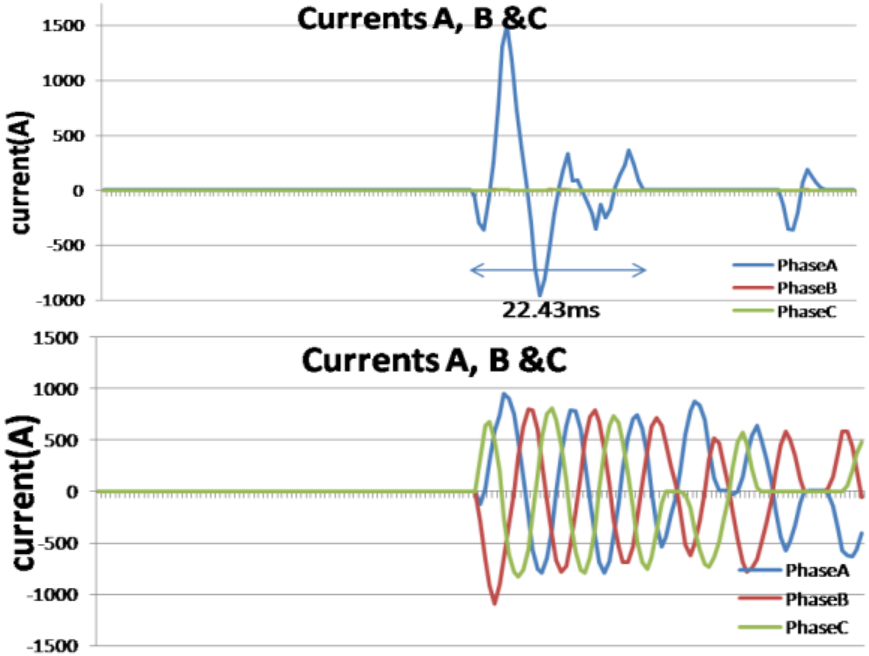

Measurement of fault current

核能研究所

(1) Power System Technology

- Power Quality Analysis

- **Power quality analysis**
  - Harmonic modeling of microgrid component
  - Harmonic power flow and unbalance analysis
- **Power quality improvement**
  - Active/passive power filter analysis & design

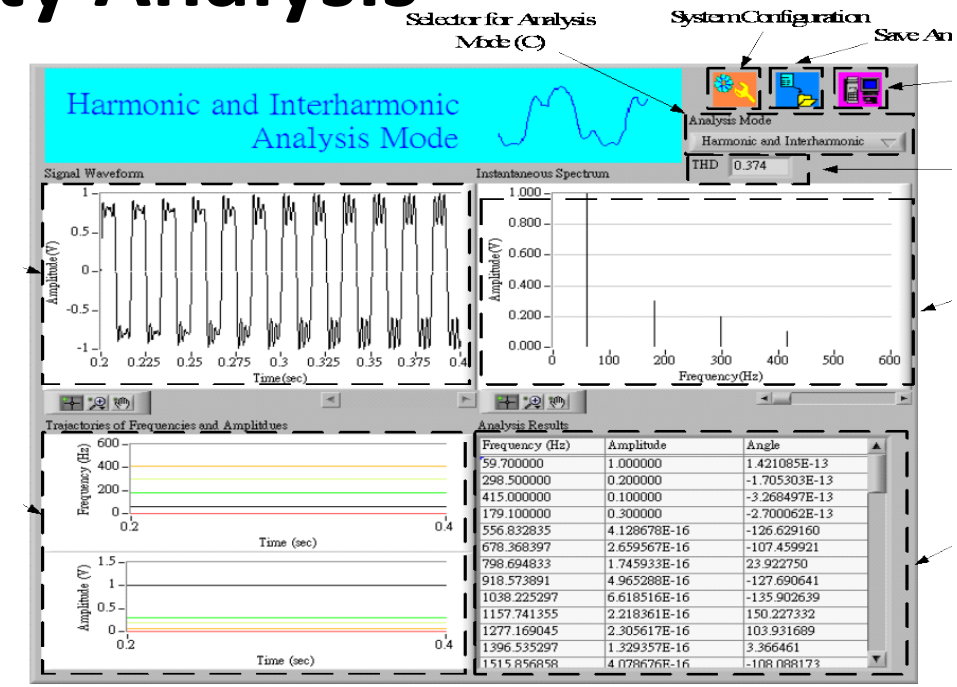

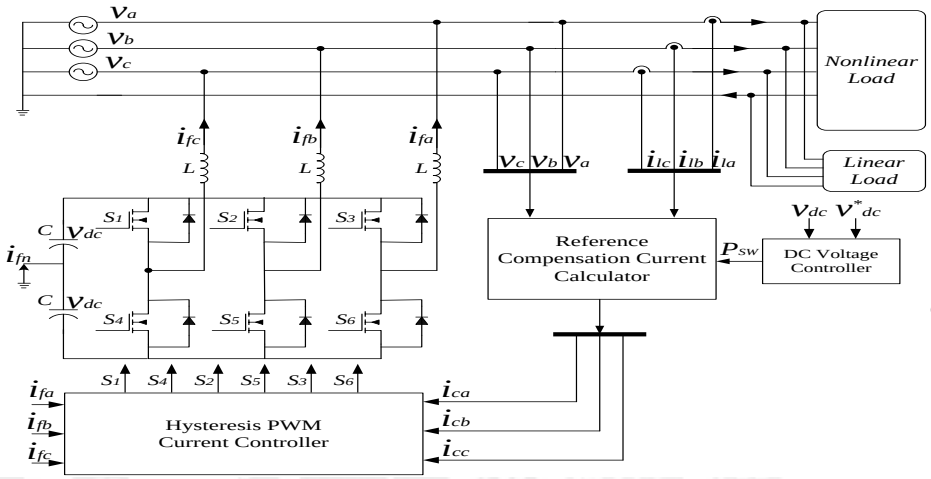

Power quality analysis of grid-tied/islanding

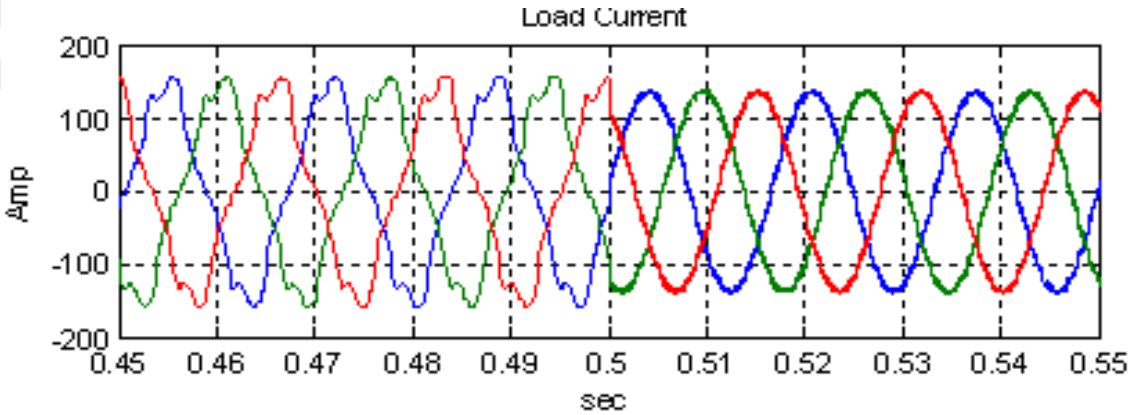

核能研究所

(2) Power Electronics Technology

- Static Switch

➢ **Active islanding detection**

- AFD, slip-mode (SMS)
- Voltage-Pulse Perturbation, Voltage Correlation
- Active/reactive power perturbation
- Sandia frequency shifting
- Impendence, Current injection

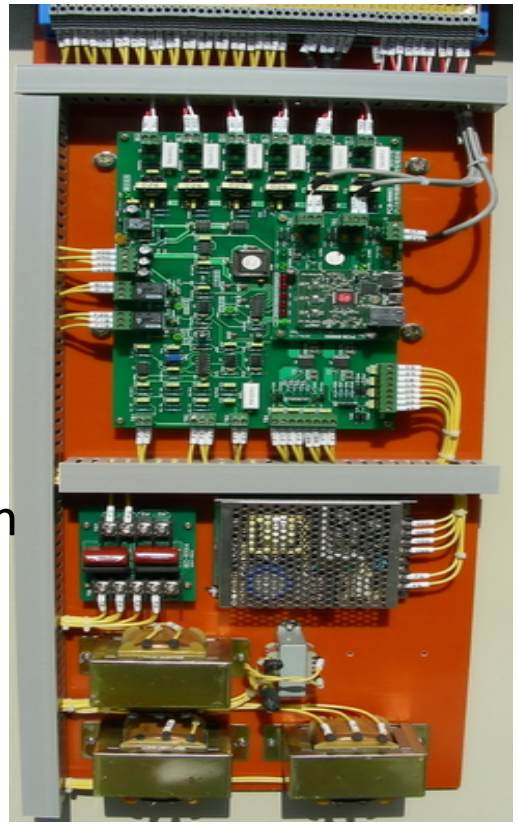

Voltage (V)	Time (sec)
V<45	0.16
45≤V<60	1
60<V<88	2
110<V<120	1
120≤V	0.16

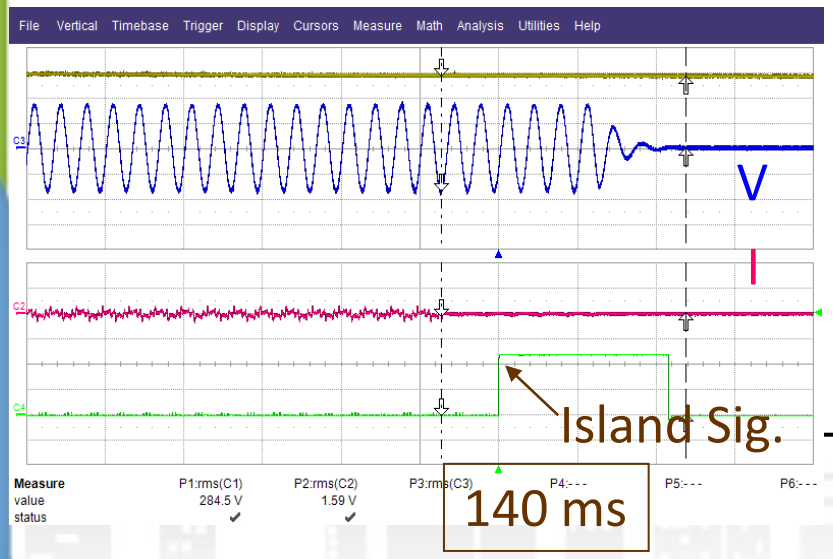

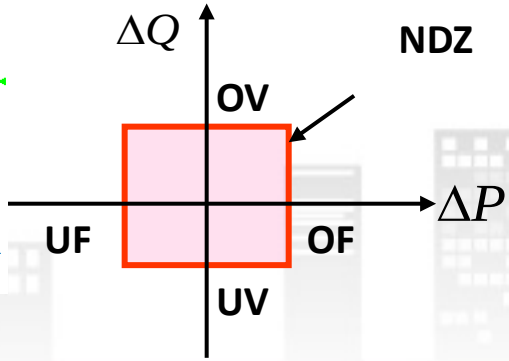

Frequency (Hz)	Time (sec)
f<57	0.16
f<59.5	2
60.5<f	2
62<f	0.16

IEEE 1547A standard (Default Setting)

核能研究所

(2) Power Electronics Technology
- Smooth Switching Inverter

- Smooth switching capability within one cycle
- Two seamless transfer strategies are developed:
  - commutation current compensation strategy
  - predictive transfer voltage control strategy

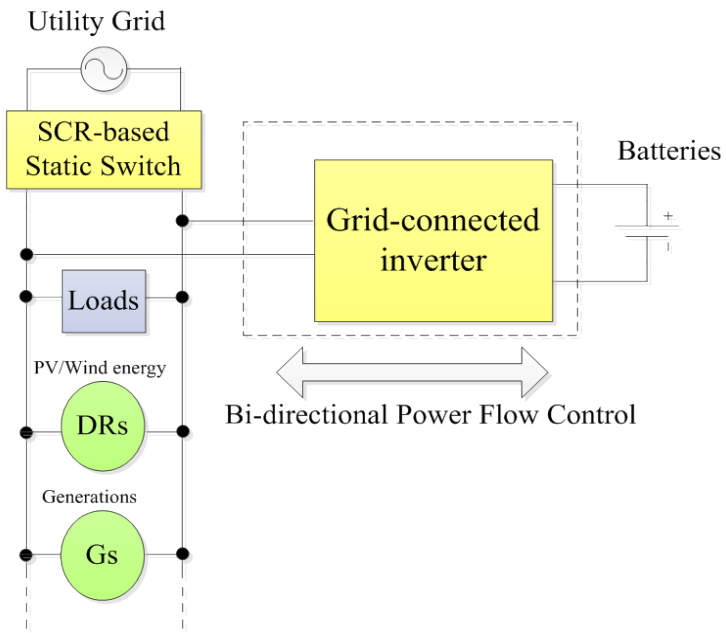

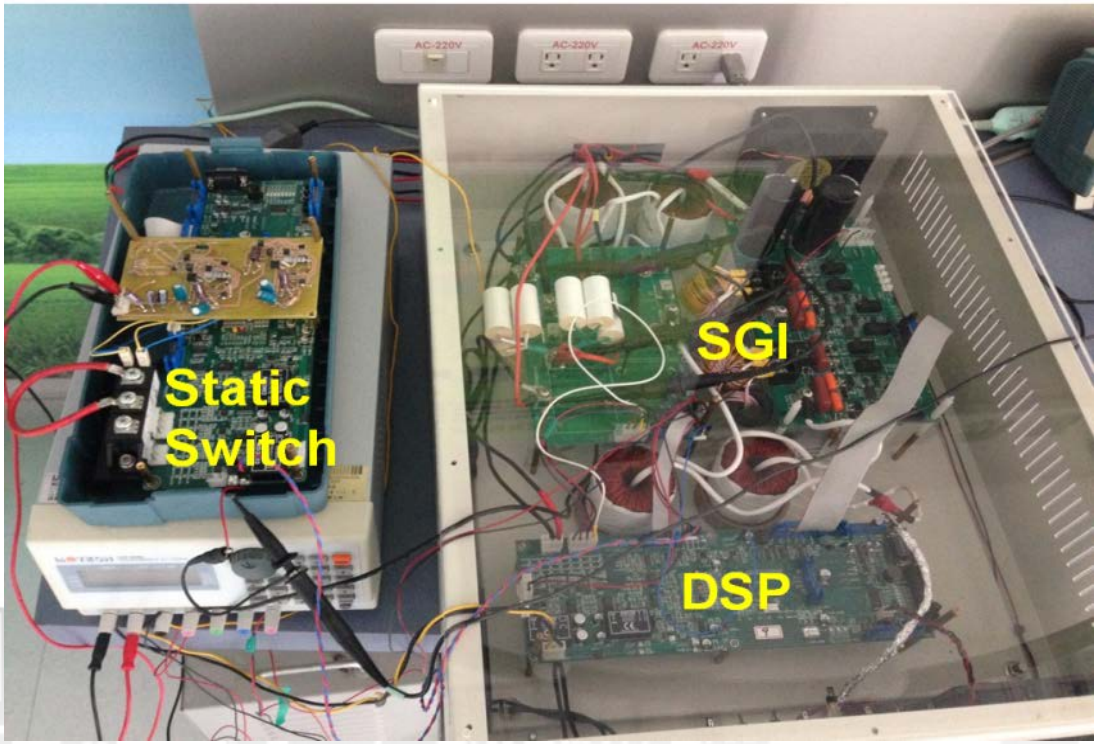

Smooth Switching Inverter(SSI)

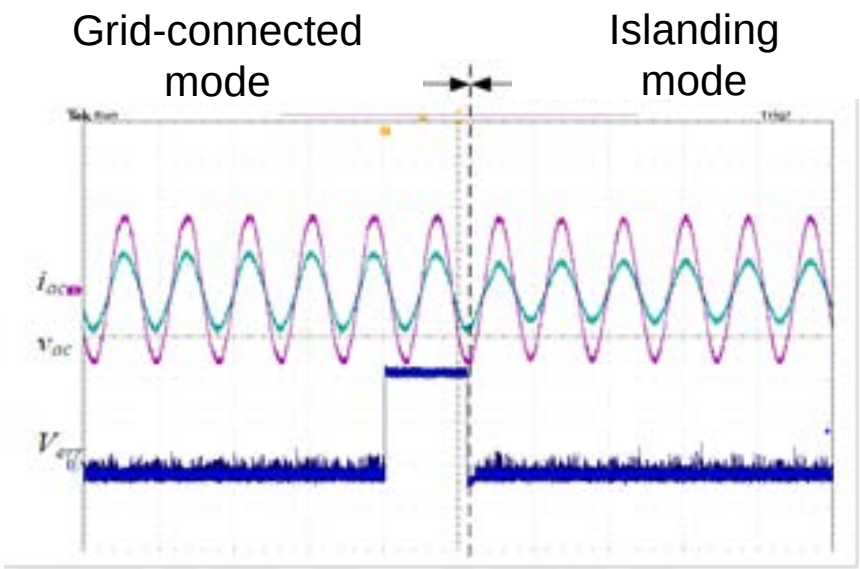

(2) Power Electronics Technology

- Multi-Level Bi-directional Inverter for Battery Energy Storage System

- Hard swapping function for BMS (Battery Management System)
- Independent Power Control for battery voltage balance
- Multilevel topology with higher output ripple frequency
- Real/reactive power compensation for microgrid

BESS

Battery Current

Grid Voltage

Grid Current

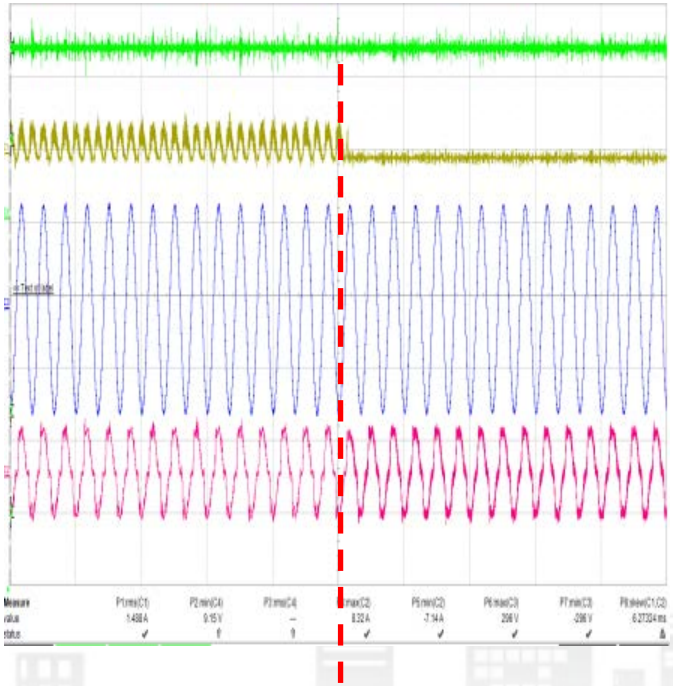

Remove one battery module

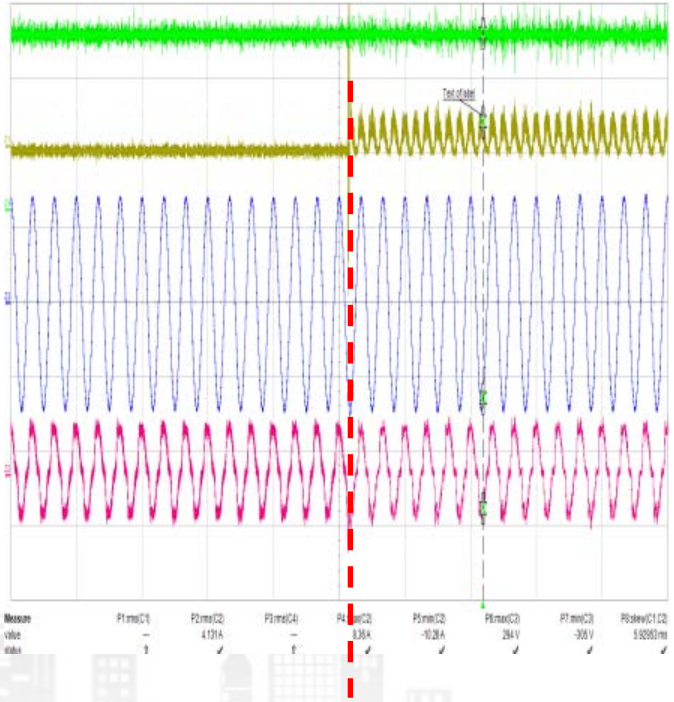

Insert one battery module

核能研究所

(3) Intelligent control and EMS

- Energy Management System

➢ **The functions of EMS are as follows:**

- Monitoring and Control Platform
- Generation Prediction
- EV Charge Scheduling Management
- Demand Response with OpenADR
- Islanding Operation Test
- Load Shedding Control

Concurrent Recording of Transient State Data

Concurrent Recording of Steady State Data

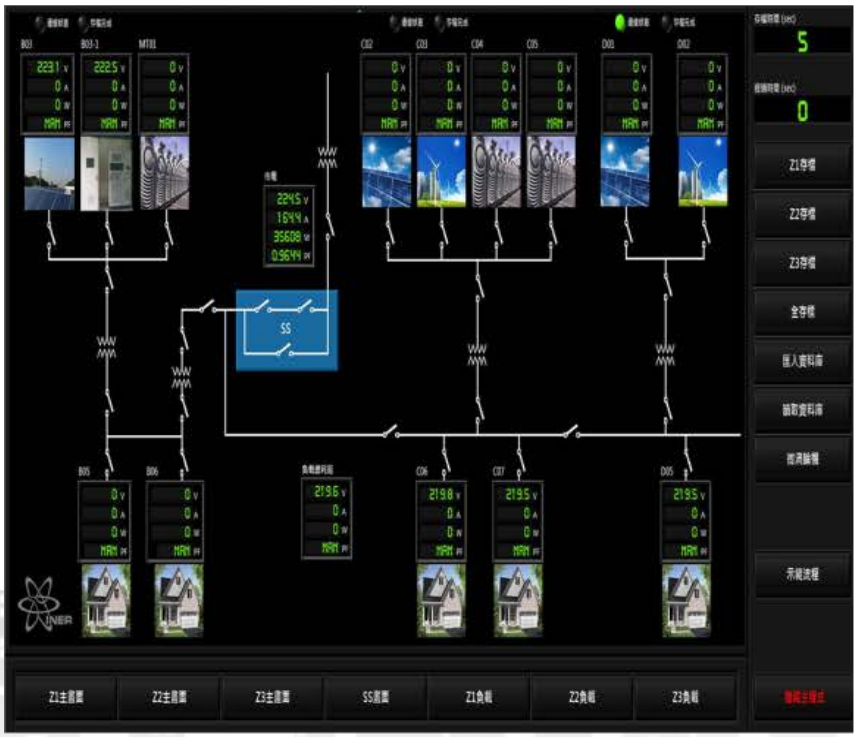

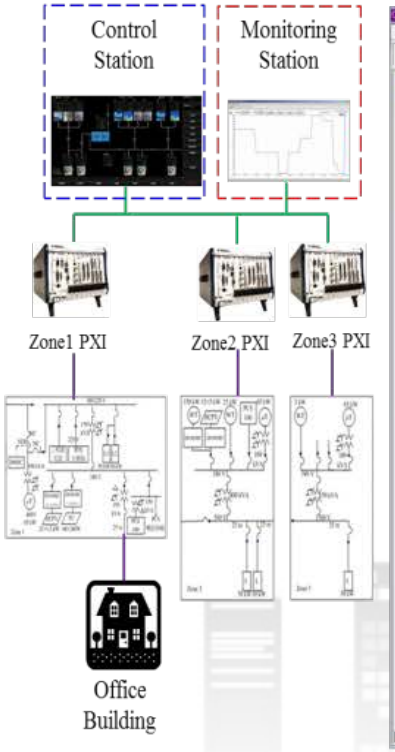

Monitoring and Control Platform

核能研究所

(3) Intelligent control and EMS

- Generation Prediction

Extreme short-term forecast – GT

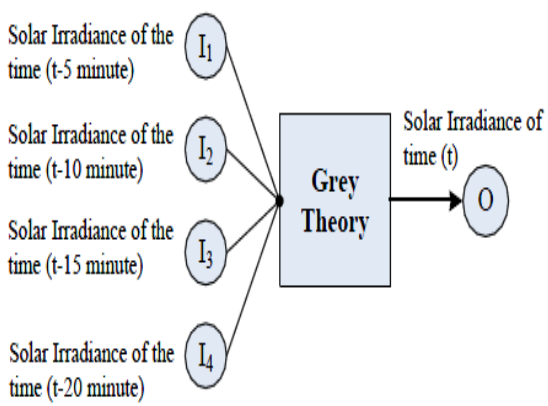

Short-term forecast – NN

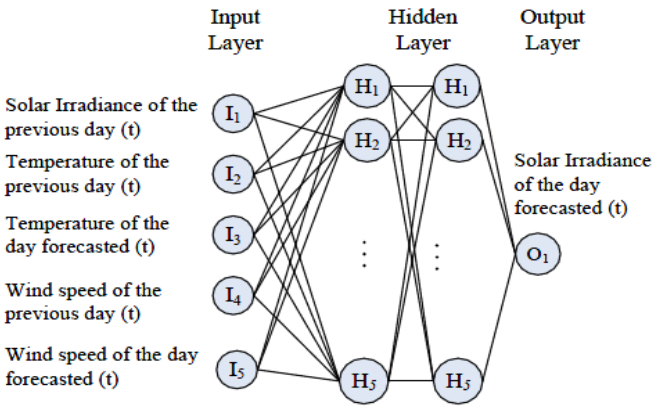

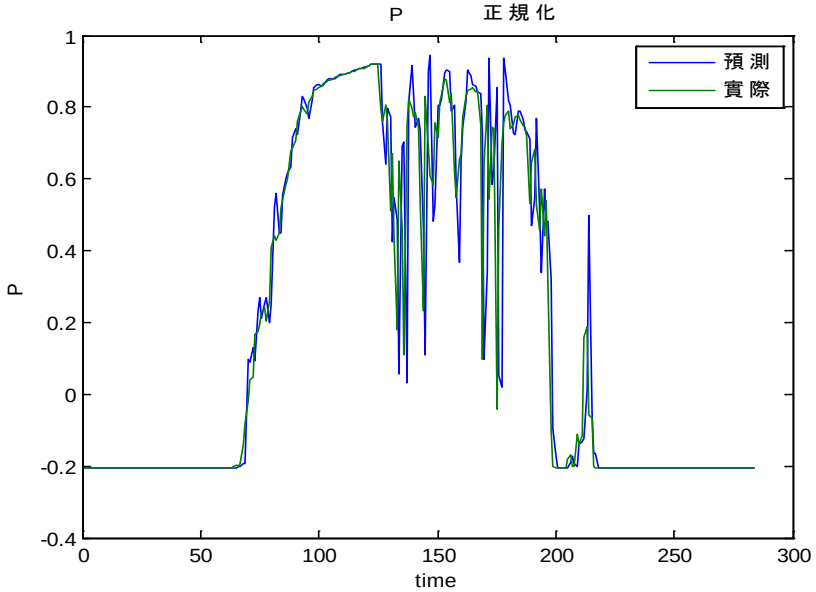

➢ 1, 5, 15 min-ahead load prediction

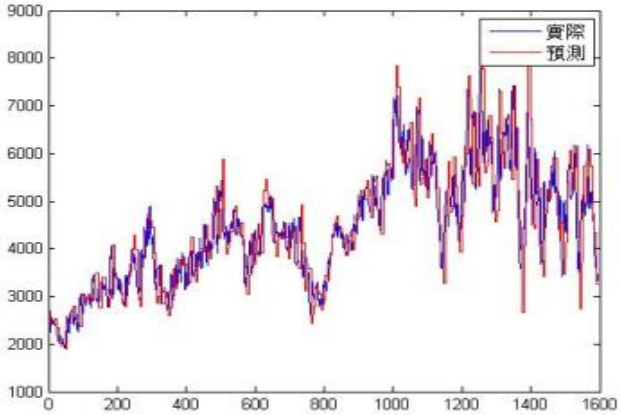

CNRMSE:3.1997%
NMBE :10.6733%
MAPE :10.3065%

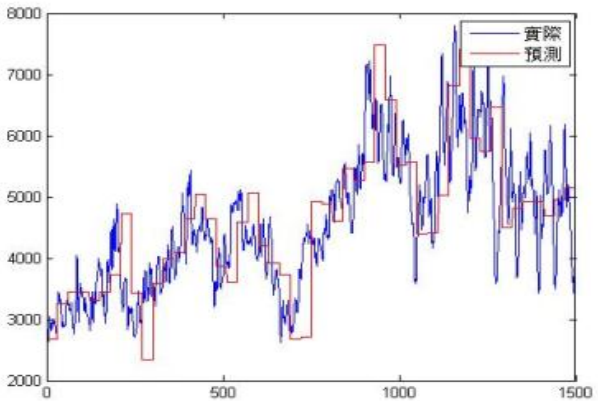

CNRMSE: 3.5773%
NMBE : 11.9459%
MAPE : 11.9657%

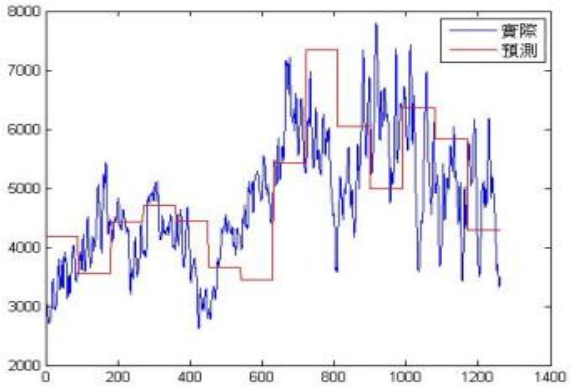

CNRMSE: 4.5518%
NMBE : 16.6932%
MAPE : 16.5805%

核能研究所

(3) Intelligent control and EMS

- EV Charge Scheduling Management

The EV charge scheduling management by considering:

- EV's parking time
- Renewable energy forecast
- Feeder load forecast

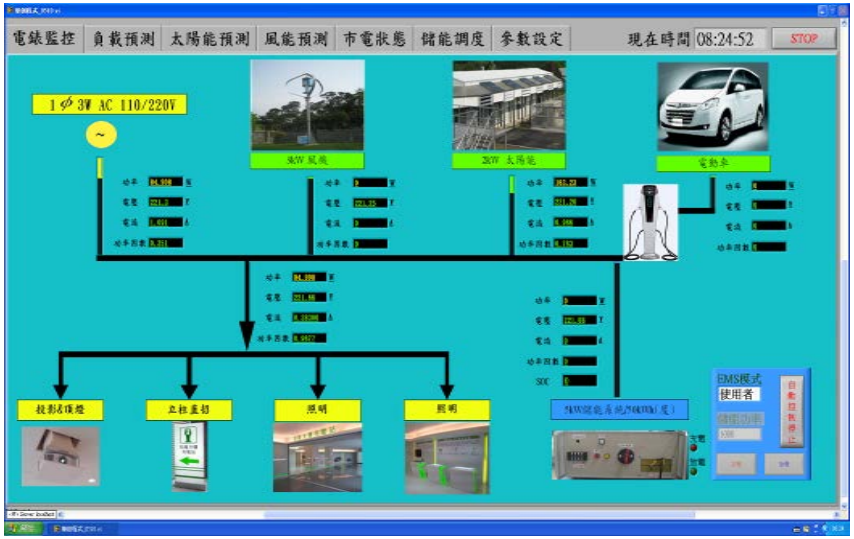

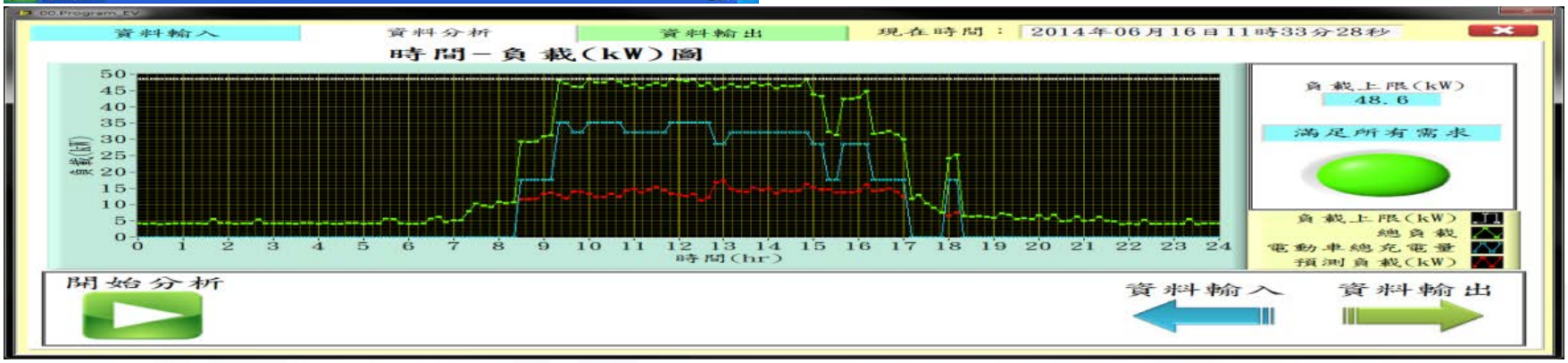

核能研究所

(3) Intelligent control and EMS

- Demand Response with OpenADR

- The demand response system using OpenADR protocol is established in INER microgrid .
- Distribute real time electricity price and utility power demand to terminal device via VTN (Virtual Top Node) and VEN (Virtual End Node)

Office Building with Demand Response Control

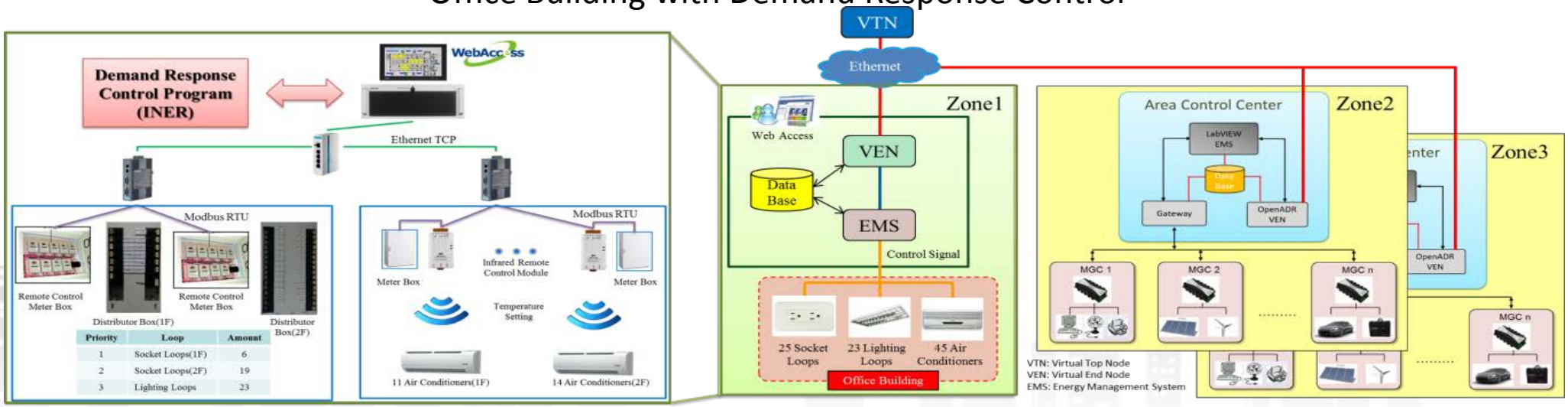

The System Architecture of Demand Response by Using OpenADR Protocol

核能研究所

(3) Intelligent control and EMS

- Islanding Operation Test

- The INER microgrid can integrate PV, MT, and BESS to supply power during in the islanding operation.
- In the islanding operation test, the renewable energy penetration rate is 54 %.

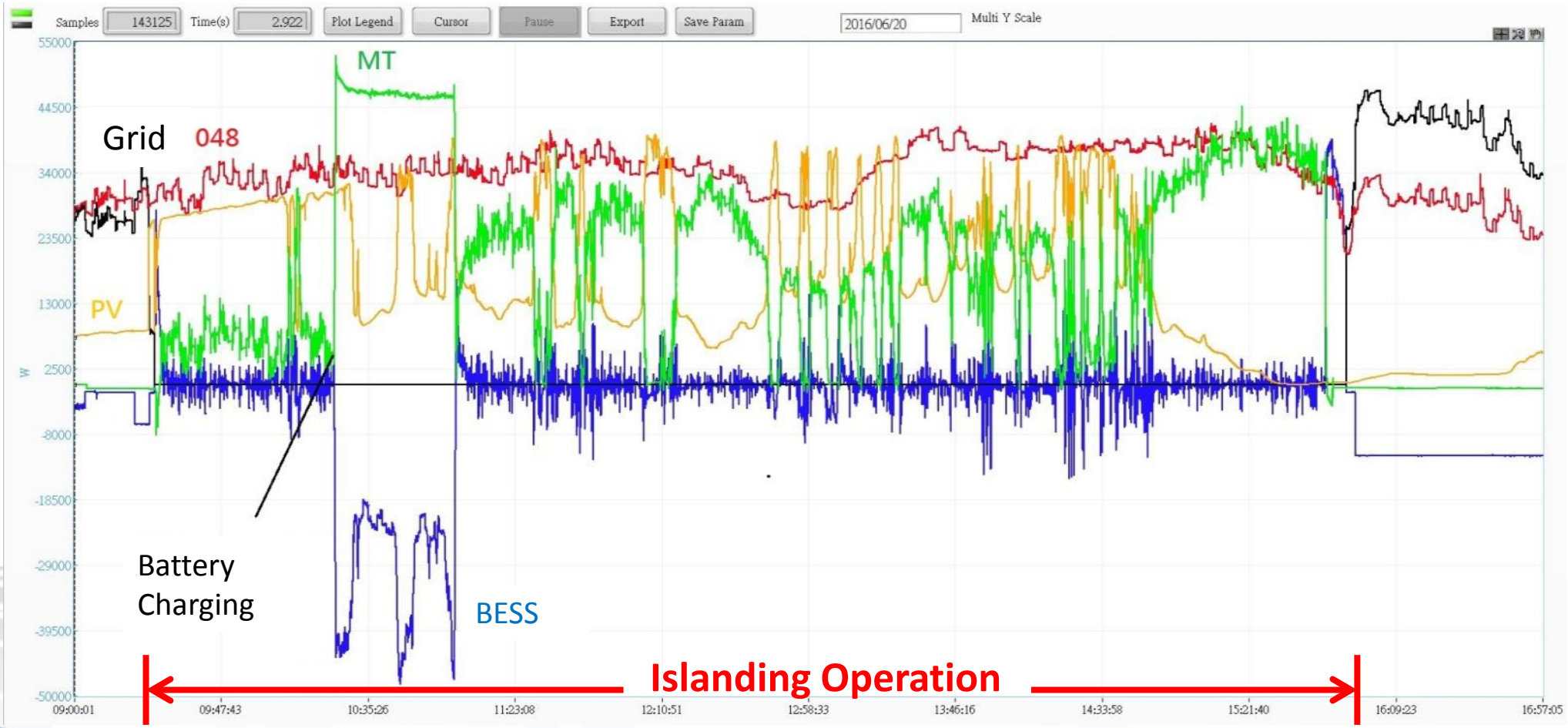

核能研究所

Outline

- Introduction of INER
- Background of Microgrid Project
- Current Research Status of Microgrid Technology
- Application Sites

核能研究所

Application Sites for INER Microgrid

Yulon City
Integrating EV and Home grid

Fusan School
Disaster Prevention MG for remote areas

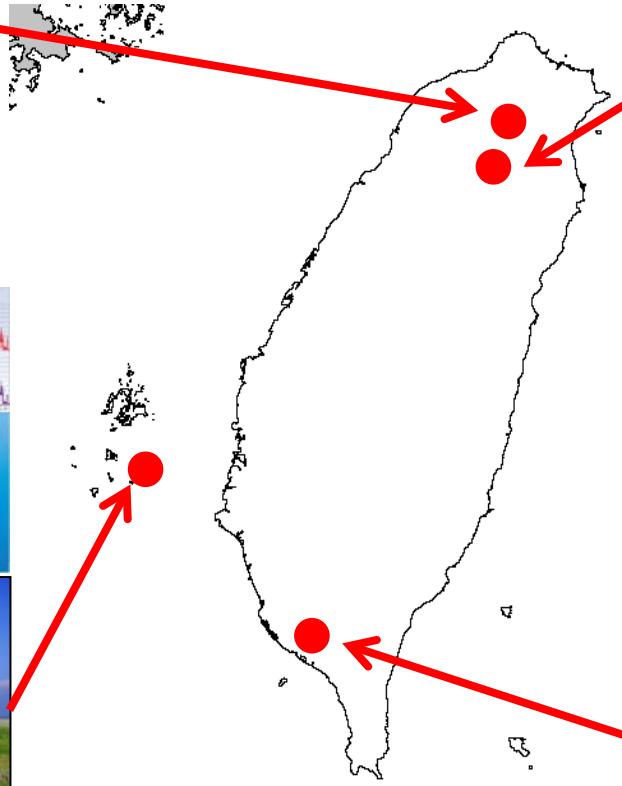

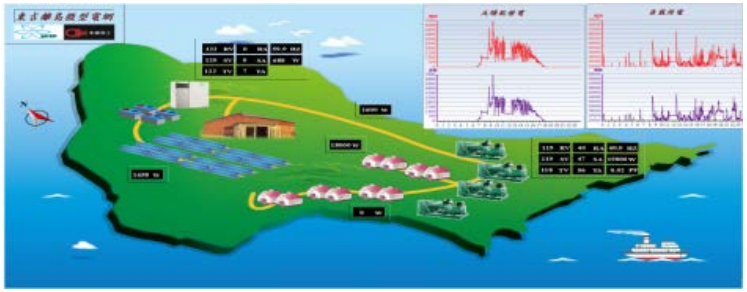

Tungchi Island
Demonstrative MG for remote islands

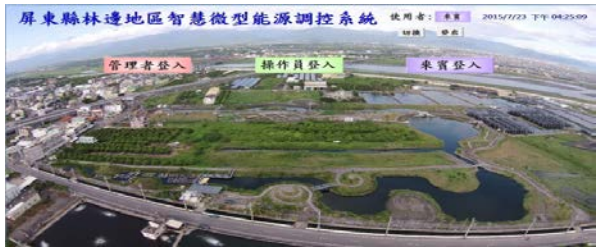

Pingtung Water Park
Integrating Solar System on the Water

Tungchi Island Microgrid

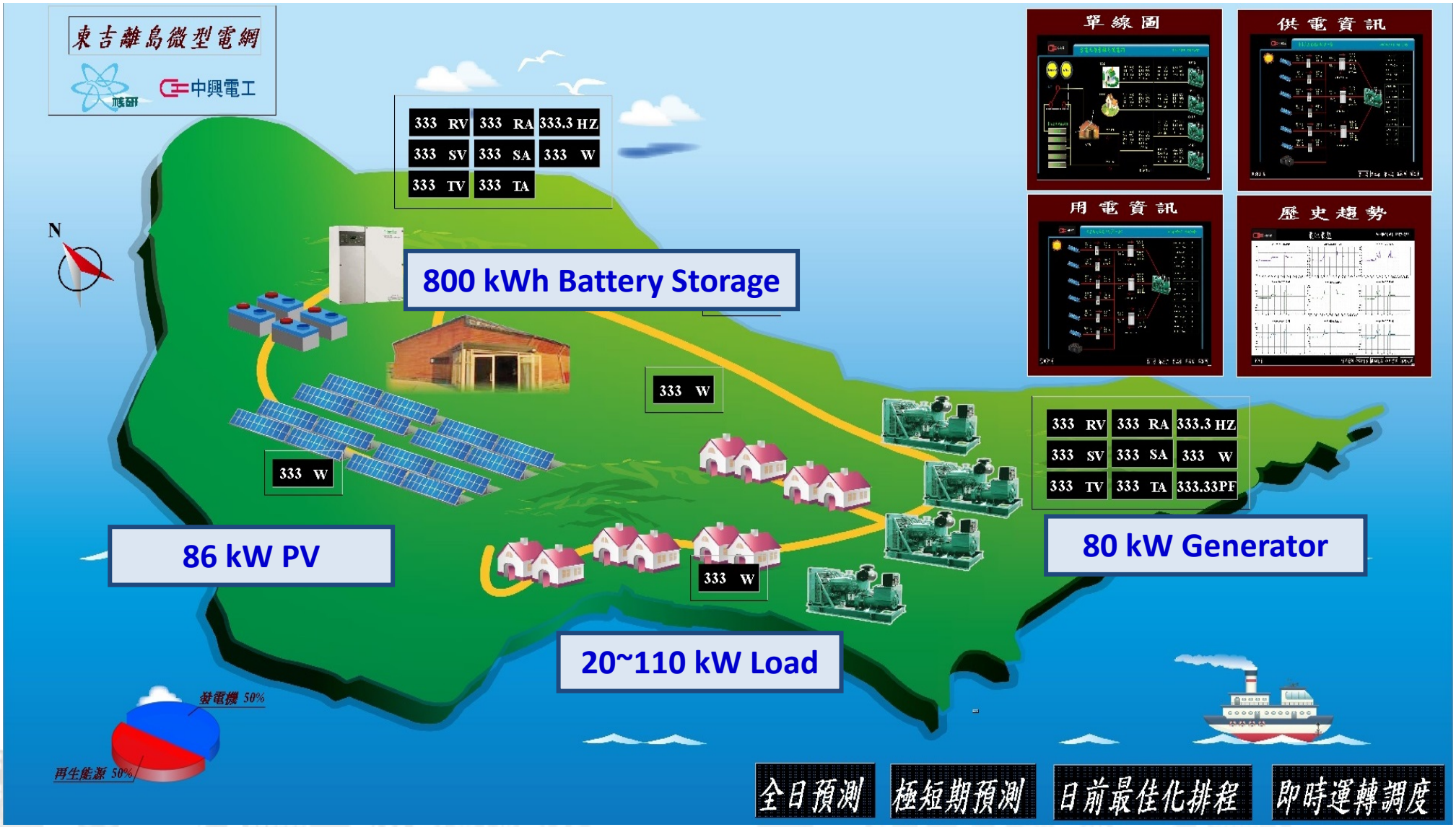

核能研究所

Tungchi Island Energy Management System

- **Energy Management System**
  - Generation Prediction
  - Load Prediction
  - Monitoring and Control
  - Energy Dispatch
  - Demand Response
  - Unbalance Compensation

核能研究所

Tungchi Island Microgrid Operation Analysis

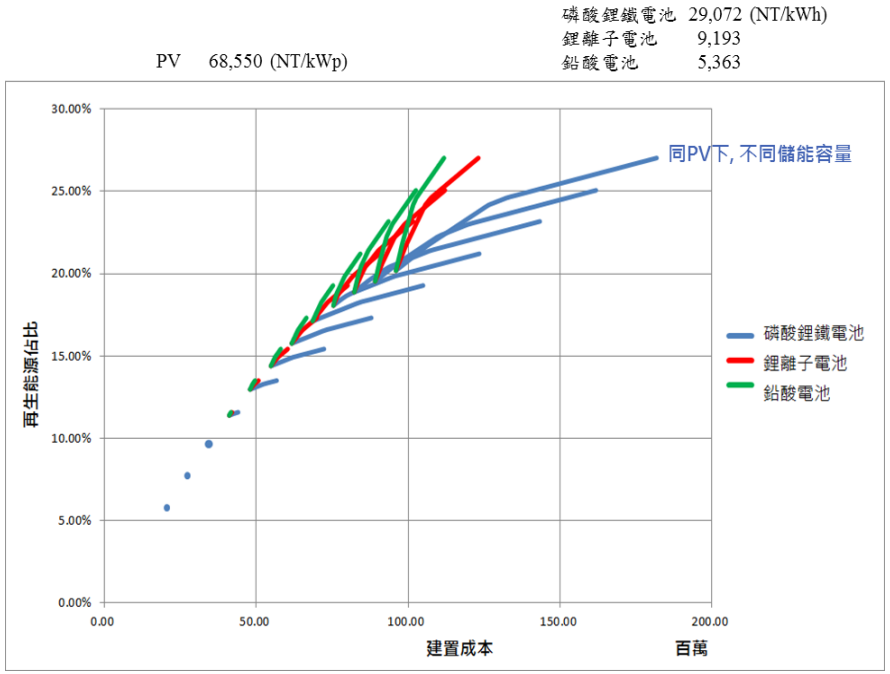

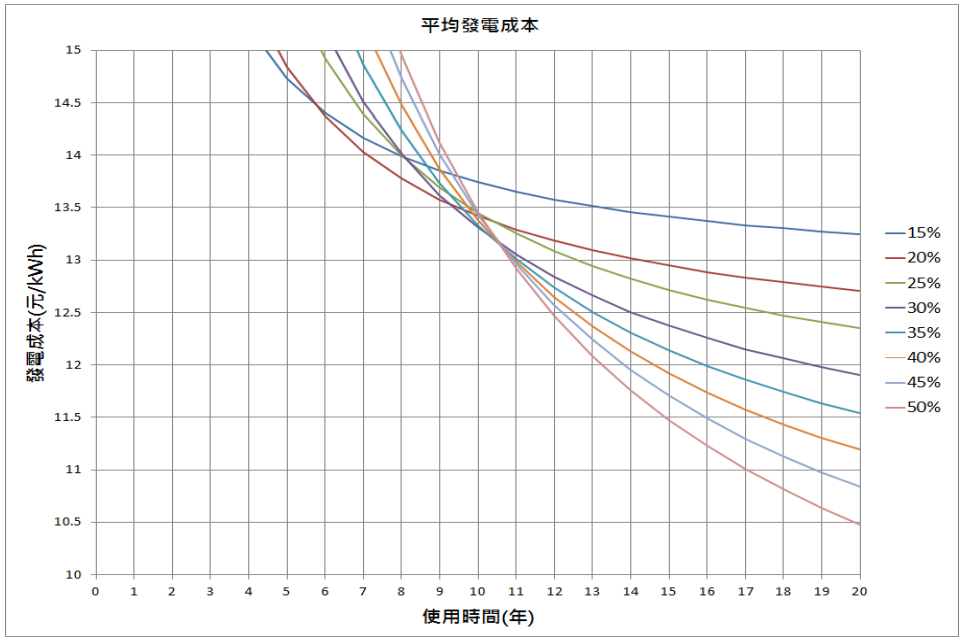

	PV Capacity (kW)	ESS Capacity (kWh)	Diesel Generator (kW)	Load (kW)	Average Generation Cost (USD/kWh)	RE Penetration rate %	Return On Investment per year %
Now	86	800	80	20~110	0.49	38.06	7.4%
Optimized Design	500	1150	80	20~110	0.29	68.18	8.07%

核能研究所

Thanks for your listening

Kuo-Yuan Lo
kylo@iner.gov.tw